ENGINEERING
YOUR SPRAY SOLUTION

ROTATING CLEANING NOZZLE WHIRLY 2

Series 5W9

GENERAL INDUSTRY



Rotating cleaning nozzle Whirly 2
Series 5W9

Features:
- Popular design in a hygienic version
- Cleaning with effective flat jets
- Various connection options
- Available with a wide range of flow rates and spray angles



FDA

ATEX version available on request

Series 5W9

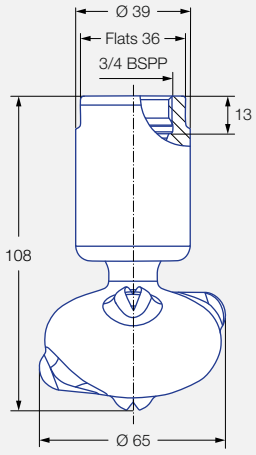

Female thread

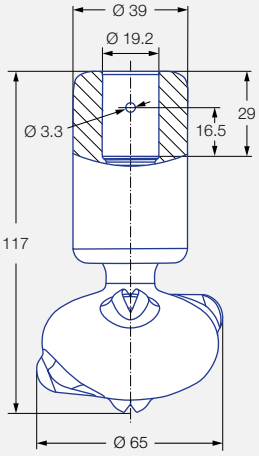

Dimensions slip-on connection according to ASME-BPE (OD-tube)

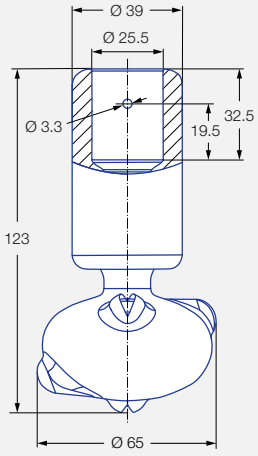

Dimensions slip-on connection according to ASME-BPE (OD-tube)

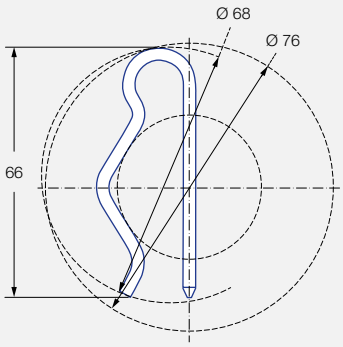

Dimensions slip-on connection top-view

Max. tank diameter [m]	0	1	2	3	4	5	6	7	8	9

Cleaning efficiency class
3

Max. temperature
140 °C

Installation
Operation in every direction is possible

Bearing
Double ball bearing made of 316L

Materials
316L, PEEK

Recommended operating pressure
2 bar

Filtration
Line strainer with a mesh size of 0.1 mm/170 Mesh

Adapter
3/4 BSPP is compatible with HygienicFit

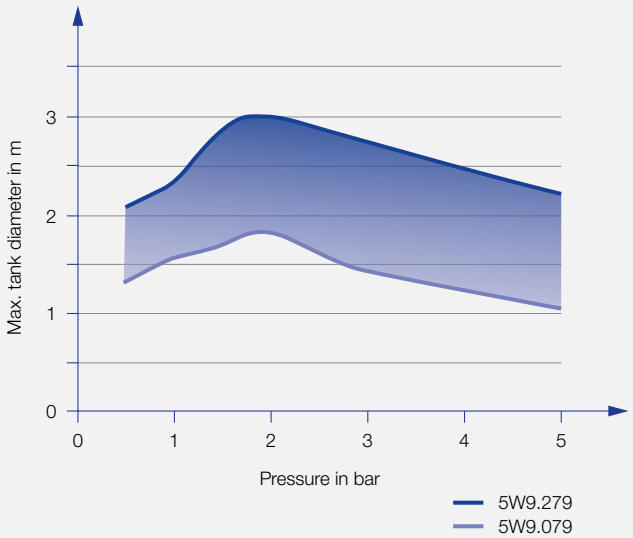

Spray angle	Ordering no.				Narrowest free cross section Ø [mm]	V̇ water [l/min]				Max. tank diameter [m]
	Type	Connection				p [bar] (p_{max} = 6 bar)				
		3/4 BSPP	3/4"- Slip-on connection	1" Slip-on connection		1,0	**2,0**	3,0	at 40 psi [US gal/min]	
270°	**5W9.075.1Y**	**AL**	**TF07**	**TF10**	2,0	34	**48**	59	15	1,8
	5W9.145.1Y	**AL**	**TF07**	**TF10**	2,8	50	**71**	87	22	2,1
	5W9.195.1Y	**AL**	**TF07**	**TF10**	3,3	69	**97**	119	30	2,6
270°	**5W9.076.1Y**	**AL**	**TF07**	**TF10**	2,0	34	**48**	59	15	1,8
	5W9.106.1Y	**AL**	**TF07**	**TF10**	2,5	41	**58**	71	18	2,1
	5W9.196.1Y	**AL**	**TF07**	**TF10**	3,4	69	**97**	119	30	2,6
360°	**5W9.079.1Y**	**AL**	**TF07**	**TF10**	1,6	34	**48**	59	15	1,8
	5W9.149.1Y	**AL**	**TF07**	**TF10**	2,4	50	**71**	87	22	2,1
	5W9.199.1Y	**AL**	**TF07**	**TF10**	3,0	69	**97**	119	30	2,6
	5W9.279.1Y	**AL**	**TF07**	**TF10**	3,5	103	**145**	178	45	3,0

NPT thread available on request.

The maximum tank diameter applies to the recommended operating pressure and is meant as a recommendation only.
The cleaning result is also affected by the type of soiling.

Compressed air should be used for dry blowing for a short time only. Operation above the recommended operating pressure has a negative impact on the cleaning result and wear.

Information about slip-on connections

- Pin made of stainless steel 316L supplied (Ordering no.: 095.013.1Y.06.72.0).
- Depending on the diameter of the adapter, the flow rate can increase due to a leakage between the adapter and the rotating cleaning nozzle.
- Minimum insertion diameter (with mounted pin) is 68 mm.

Example of ordering:	Type	+	Connection	=	Ordering no.
	5W9.075.1Y	+	**AL**	=	**5W9.075.1Y.AL**

Clean performance.
For pure hygiene.

Whirly 2

Function video
www.lechler.com/de-en/medialibrary
Or scan the QR Code.

ENGINEERING
YOUR SPRAY SOLUTION

Lechler GmbH · Precision Nozzles · Nozzle Systems
Ulmer Strasse 128 · 72555 Metzingen, Germany · Phone +49 7123 962-0 · info@lechler.de · www.lechler.com



Edition 08/21 · EN · PDF
Subject to technical modifications or mistakes.